Power cable connection

This installation drawing is an addition to the original operating instructions.
Read operating instructions before wiring.

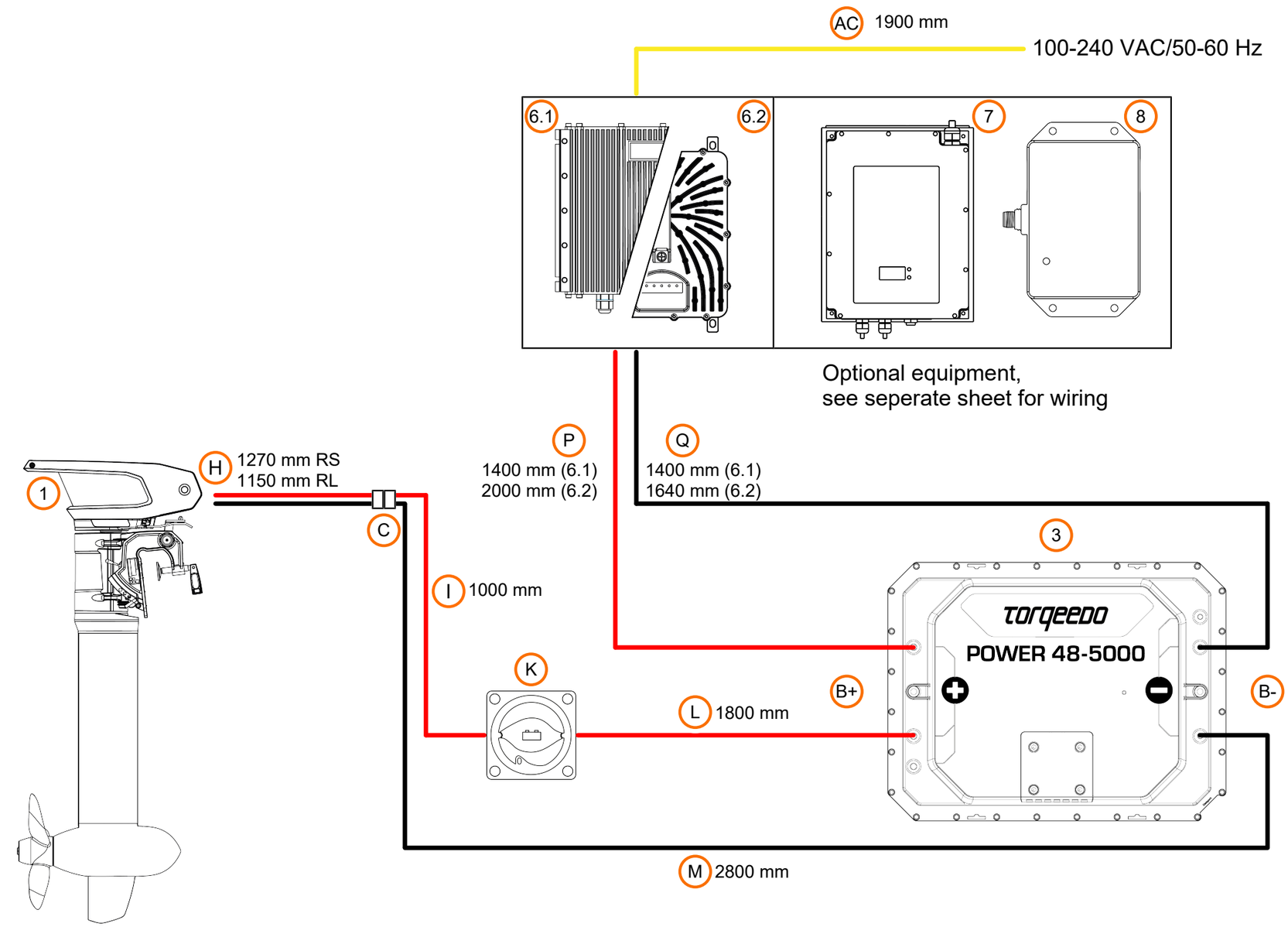

Positive power cable

Negative power cable

Positive charging cable

Negative charging cable

AC power cable

Power cable connection

This installation drawing is an addition to the original operating instructions.
Read operating instructions before wiring.

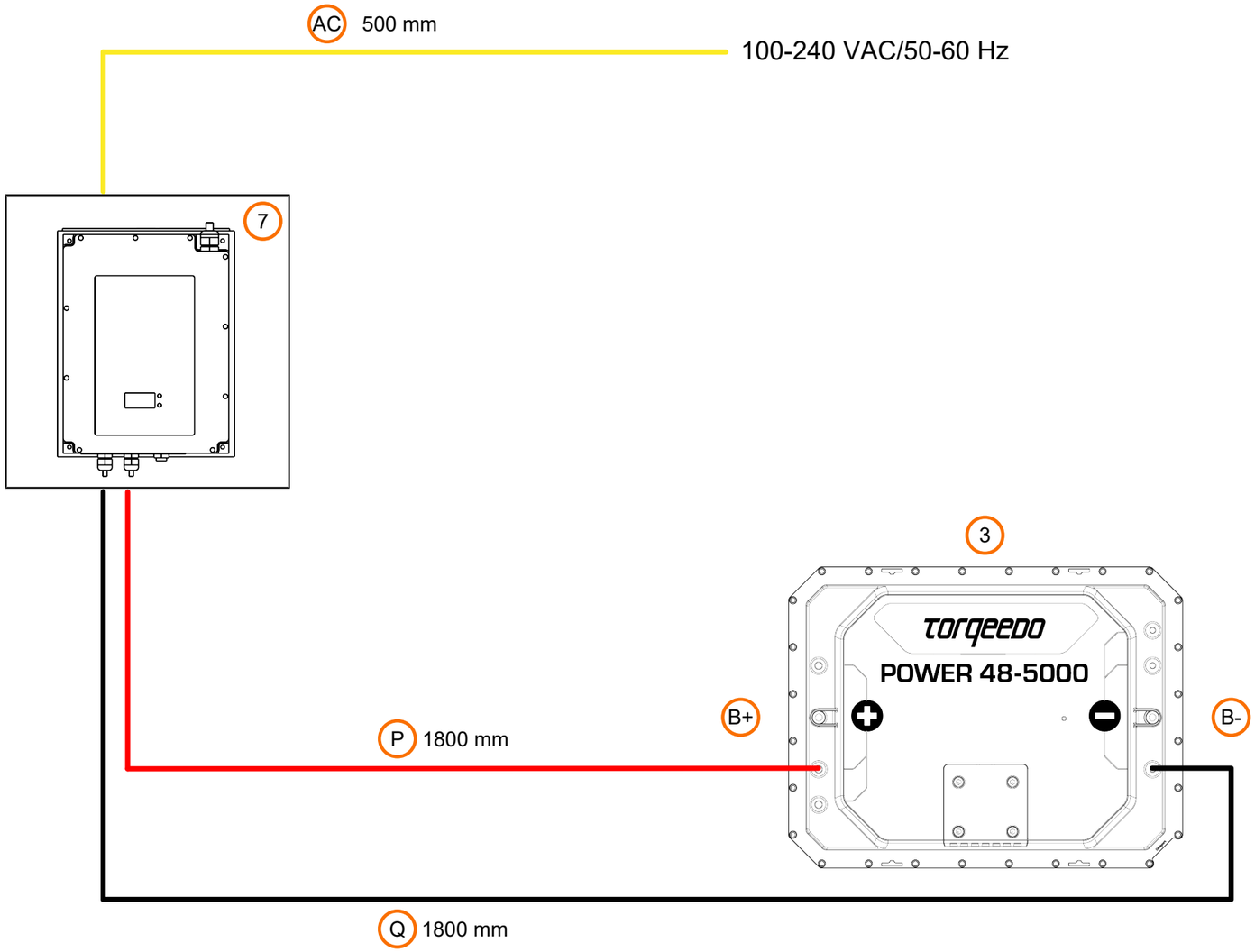

Positive power cable

Negative power cable

Positive charging cable

Negative charging cable

AC power cable

Power cable connection

This installation drawing is an addition to the original operating instructions.
Read operating instructions before wiring.

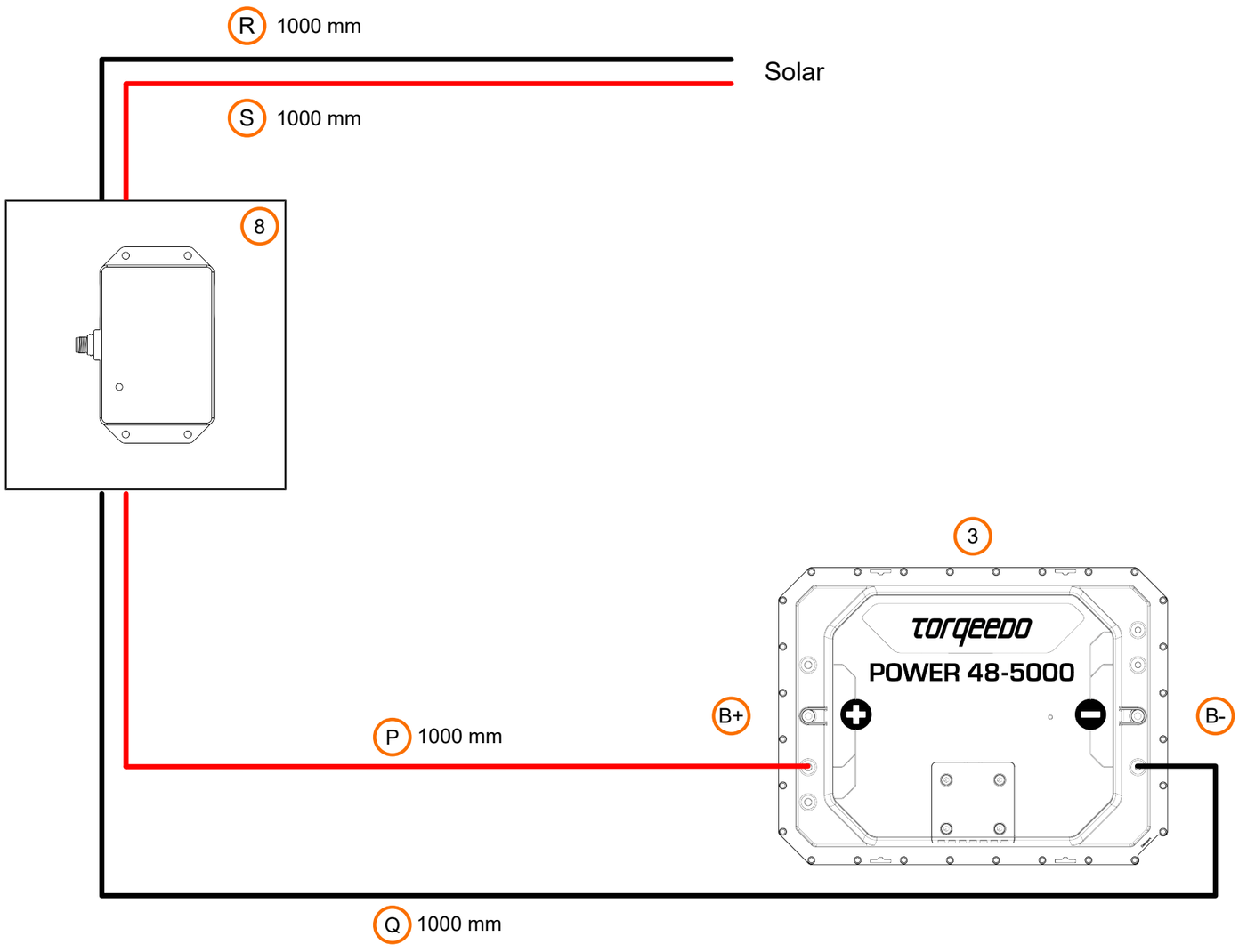

Positive power cable

Negative power cable

Positive charging cable

Negative charging cable

System grounding connection

This installation drawing is an addition to the original operating instructions.
Read operating instructions before wiring.

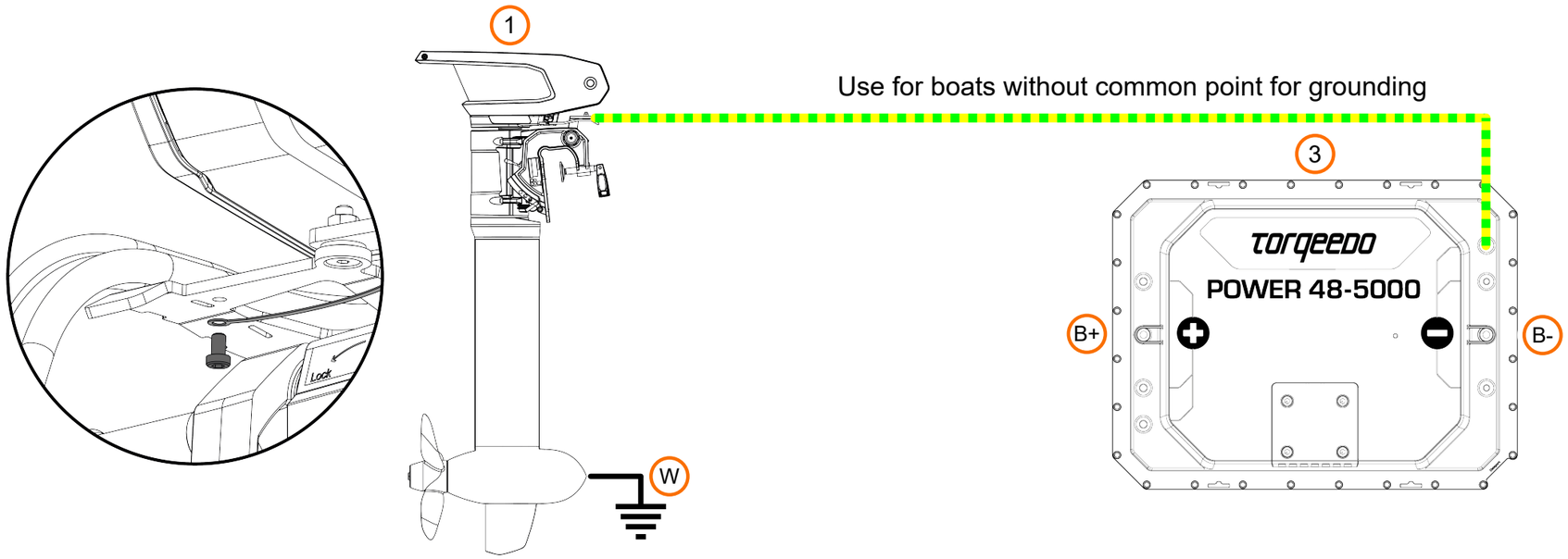

25 mm2 [3 AWG] grounding cable

In this configuration the motor fullfills the function of the grounding point

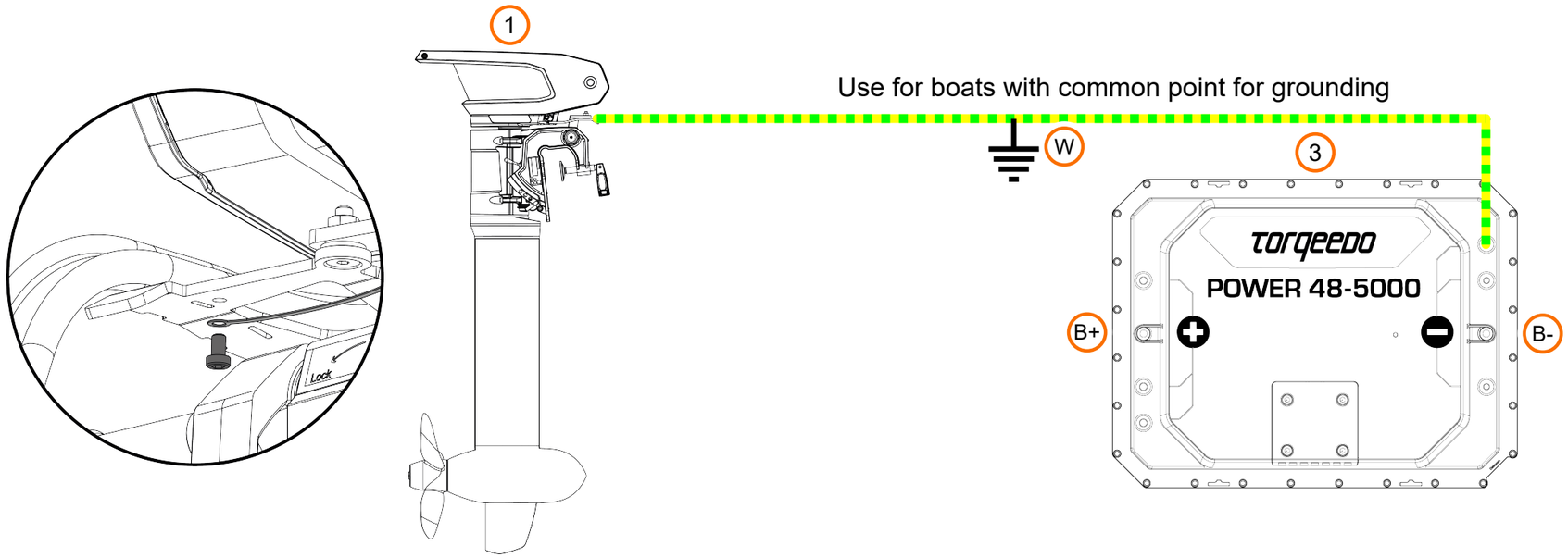

25 mm2 [3 AWG] grounding cable

System grounding connection

This installation drawing is an addition to the original operating instructions.
Read operating instructions before wiring.

In case the charger is permanently installed in the boat,
the charger housing or its AC PE and battery negative pole
must be connected to the common grounding point.
The AC connection requires specialist knowledge
and may only be carried out by qualified personnel.
If necessary, have the planning and installation carried out by a specialist.

NOTE! To charge the batteries in the boat, a land connection in the boat with galvanic isolator or isolation transformer is required according to applicable national requirements (e.g. DIN EN ISO 13297, ABYC E-11).

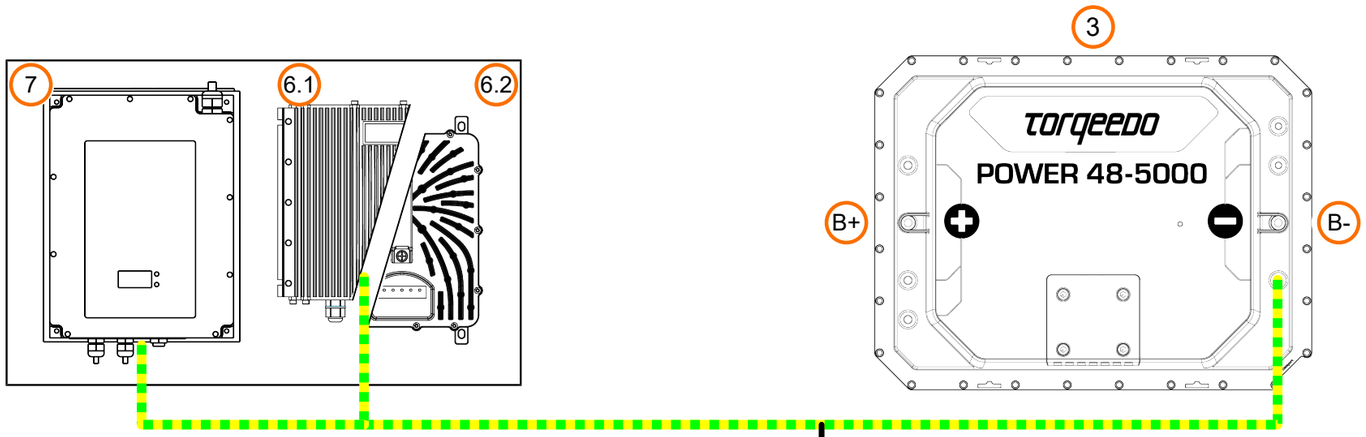

W Connect the charger housing and the negative battery pole to the common grounding point.

25 mm2 [3 AWG] grounding cable

Data cable connection

This installation drawing is an addition to the original operating instructions.
Read operating instructions before wiring.

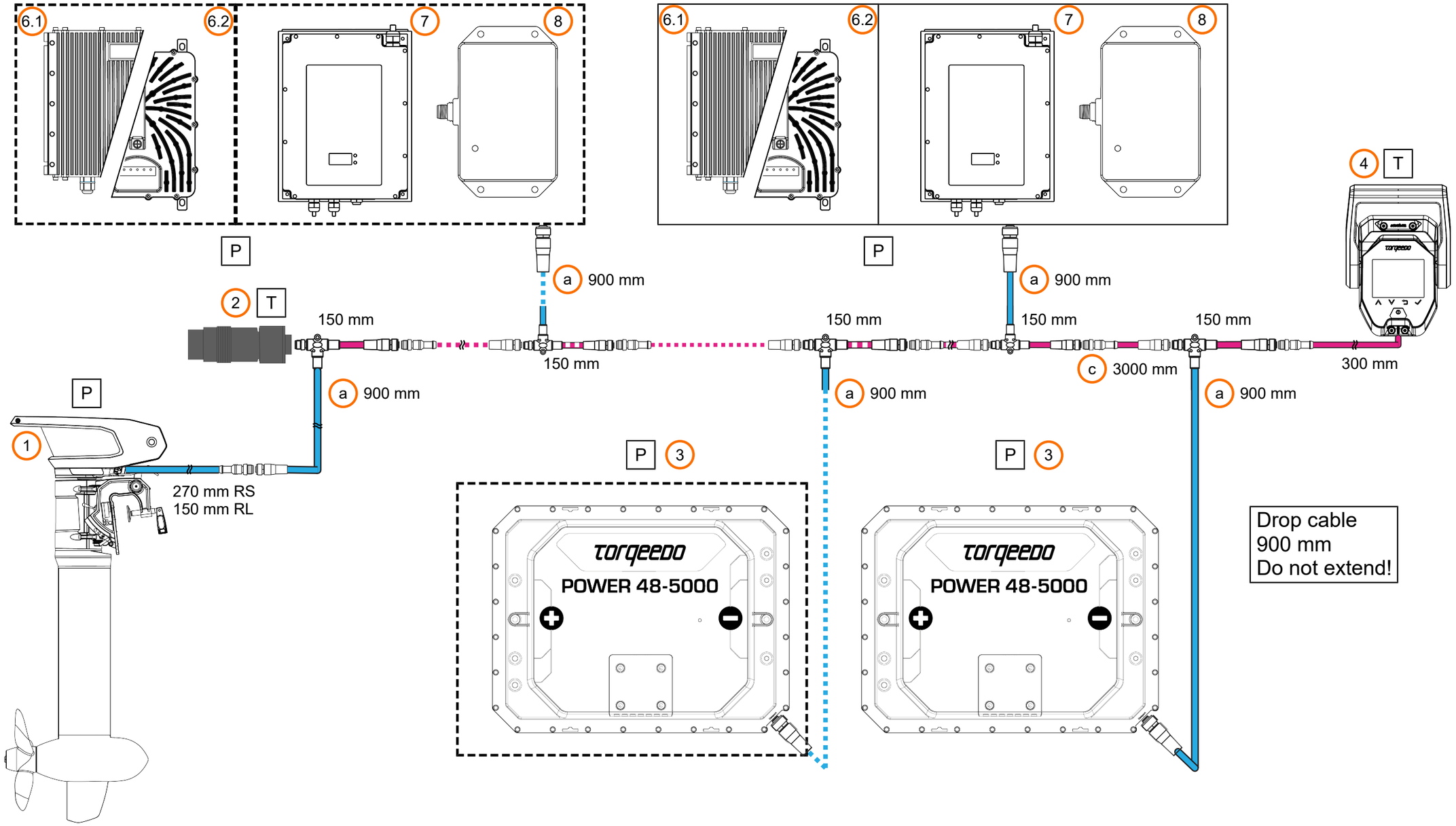

Drop cable - TorqLink, 8 pin data cable

Backbone - TorqLink, 8 pin data cable

T TorqLink Terminator

P Participant

Optional

Bill of material/Legend

This installation drawing is an addition to the original operating instructions.
Read operating instructions before wiring.

Motor

Pos.	Item number	Name	Notes/Remarks
1	1320-00	Cruise 3.0 RS (48 V)	
	1321-00	Cruise 3.0 RL (48 V)	
	1324-00	Cruise 6.0 RS (48 V)	
	1324-10	Cruise 6.0 RS (48 V) 4,3 kW	
	1325-00	Cruise 6.0 RL (48 V)	
	1325-10	Cruise 6.0 RL (48 V) 4,3 kW	

Cable set

Pos.	Item number	Name	Notes/Remarks
H, I, K, L, M		Cable set with battery switch	See picture for cable length
C		Power connector	Max. 175 A
2		TorqLink Terminator	
a		T-Cable 8-pin	900 mm/150 mm; Do not extend!

Power 48-5000

Pos.	Item number	Name	Notes/Remarks
3	2104-00	Power 48-5000	Select TorqLink-Battery in throttle menu!
a		T-Cable 8-pin	900 mm/150 mm; Do not extend!
not illustrated		+ Battery pole adapter - Battery pole adapter	Not needed for your configuration

Throttle 1976-00

Pos.	Item number	Name	Notes/Remarks
4	1976-00	TorqLink Throttle	
c		Backbone TorqLink cable 8-pin	3000 mm

Charger 650 W for Power 48-5000

Pos.	Item number	Name	Notes/Remarks
6.1	2213-00	Charger 650 W for Power 48-5000	**NOTE!** When using 650 W Charger (2213-00) with solar charge controller (2218-00) in one system. Ensure electrical disconnection between solar charger and solar panel to enable charging.
P		+ DC charge cable	1400 mm; Do not extend!
Q		- DC charge cable	1400 mm; Do not extend!
B +		+ Battery pole	17 Nm
B -		- Battery pole	30 Nm
AC		AC power cable	1900 mm
a		T-Cable 8-pin	900 mm/150 mm; Do not extend!

Charger 700 W for Power 48-5000

Pos.	Item number	Name	Notes/Remarks
6.2	2219-00/2219-10	Charger 700 W	Use AC-Adapter (7015-00) for AUS/ UK
P		+ DC charge cable	2000 mm; Do not extend!
Q		- DC charge cable	1640 mm; Do not extend!
B +		+ Battery pole	17 Nm
B -		- Battery pole	30 Nm
AC		AC power cable	2000 mm
a		T-Cable 8-pin	900 mm/150 mm; Do not extend!

Torqeedo system grounding

Pos.	Item number	Name	Notes/Remarks
W		Torqeedo system grounding	Min. 25 mm2 [3 AWG] not included

Optional equipment

Fast charger 2900 W for Power 48-5000

Pos.	Item number	Name	Notes/Remarks
7	2212-00	Fast charger for Power 48-5000	2900 W
P		+ DC Charge cable	1800 mm; Do not extend!
Q		- DC charge cable	1800 mm; Do not extend!
B +		+ Battery pole	17 Nm
B -		- Battery pole	30 Nm
AC		AC power cable	500 mm
a		T-Cable 8-pin	900 mm/150 mm, Do not extend!

Solar

Pos.	Item number	Name	Notes/Remarks
8	2218-00	Solar charge controller for Power 48-5000	For TorqLink system only! Only as stand alone charger or in combination with 2212-00/2219-00/2219-10
P		+ Charge cable	1000 mm
Q		- Charge cable	1000 mm
R		+ Input solar cable	1000 mm
S		- Input solar cable	1000 mm
a		T-Cable 8-pin	900 mm/150 mm; Do not extend!

Information

This installation drawing is an addition to the original operating instructions.
Read operating instructions before wiring.

The following products already have an internal Terminator: Cruise 3.0-6.0 TS/TL (48 V); Terminator Single & Terminator Twin; Throttles: 1918-00, 1976-00

The connection position of the remaining components on the backbone can be freely selected.

- Do not install cables in permanently wet areas, such as bilges.
- Do not bundle power cables with data or antenna cables (e.g. radios) for other loads.
- Do not route cables around sharp edges without chafing protection.
- Do not extend drop cables, extend backbone if necessary.
- Do not exceed the minimum bending radius.
- Do not pull on cables.
- Do not twist cables.
- Protect plugs and contacts against contamination before installating them.
- Live parts must be fitted or installed with protection against accidental contact; the necessary installation space must be considered during the planning stage.
- Required grounding point for the Torqeedo system is provided.
- If a second grounded onboard power system is available, ensure that both systems use a common grounding point.
- Provide sufficient installation space for protection against accidental contact.
- Check required cable cross-sections (see section *Tools, equipment and material*).
- Consider grounding connection and required cables during planning.
- Determine and plan installation positions of all components.
- Plan the backbone layout without extending drop cables.
- Measure required backbone length and all required stub lines.
- If necessary, extend the backbone using approved extensions.
- Install cables free of chafing and not around sharp edges, if necessary, attach chafing protection.
- Provide chafing protection where fixing is not possible.
- Openly laid cables (e.g. inflatable boat) must be protected with a scuff guard, plan sufficient material.
- Cables must be fixed every 400 mm, plan attachment material. In places where fastening is not possible, a scuff guard must be fitted.
- Install plug connections free of tension and mechanical load.
- Always connect batteries as the last component to the system to avoid short circuits and voltage peaks.
- Termination resistor: Must be placed at each end of the backbone. Only new cruise motors (48 V) with tiller have a termination resistor inside of it.
- Observe the minimum bending radius when laying all cables:

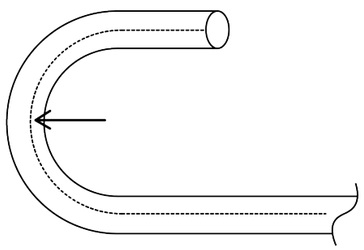

Torqeedo data cable	8 x diameter
Torqeedo power cable	8 x diameter
Grounding cable	see cable manufacturer's specifications
Other power cables	see cable manufacturer's specifications